Data sheet | Item number: 770-813

Plug for PCBs; straight; 3-pole; Cod. A

770-813

RoHS ✓ Compliant

BOMcheck.net

Color: ■

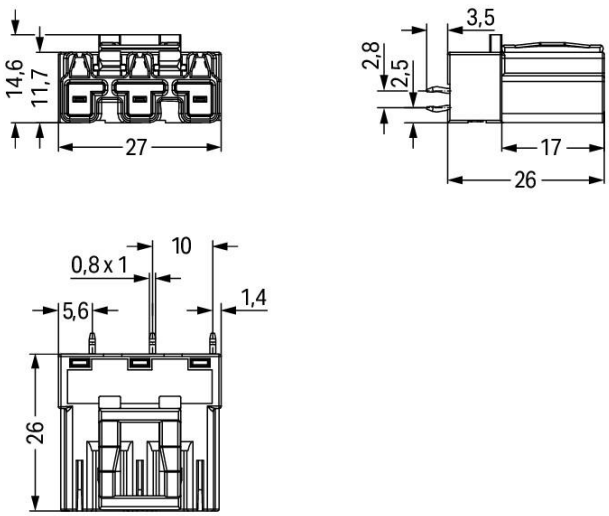

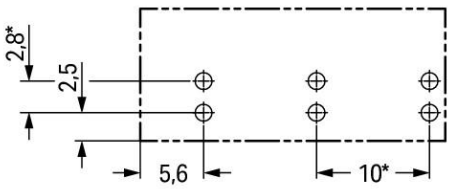

* ± 0.05 mm
Drilled hole diameter: $1.5^{+0.1}$ mm

Item description

- Protected against mismating and maintenance-free
- Push-in CAGE CLAMP® spring pressure connection technology allows solid conductors to be simply pushed into a unit
- Two-wire connection per pole for loops or bridges
- Additional variable coding is possible

Note:

All connectors for mounted installations (snap-in versions for lighting fixtures or devices, all types of PCB and distribution connectors) are factory-equipped with locking levers to ensure plugs and sockets are securely locked. Additional locking levers are only required for flying leads (plug /socket).

Data

Electrical data

Note on Contact Resistance	
	approx. 1mΩ contact resistance
	approx. 0.25mΩ contact transition plug/socket

Ratings per IEC/EN 60664-1

Rated voltage (III / 3)	250 V
Rated impulse voltage (III / 3)	4 kV
Rated current	25 A

Approvals per UL 1977

Rated voltage per UL 1977 (factory wiring only)	600 V
Rated current per UL 1977 (factory wiring only)	23 A

Connection data

No. of poles	3
Total number of potentials	3
Number of levels	1
Ground function	with preceding GND contact

Geometrical Data

Pin spacing	10 mm / 0.394 inch
Width	27 mm / 1.063 inch
Height	29.5 mm / 1.161 inch
Height from the surface	26 mm / 1.024 inch
Depth	14.6 mm / 0.575 inch
Solder pin length	3.5 mm
Solder pin dimensions	1 x 0.8 mm
Drilled hole diameter (tolerance)	$1.5^{(-0.1 \ldots +0.1)}$ mm

Mechanical data

Coding	A
Mating force of a plug-in connection	approx. 20 … 70 N (depending on pole number)
Retention force of a plug-in connection	When locked: > 80 N
Unmating force of a plug-in connection	when unlocked: approx. 20 … 70 N (depending on pole number)
Number of mating cycles	200, without resistive load 100, with resistive load I_N = 25A, tested (4 mm^2/AWG 12)
Design	straight
Marking	L N
Protection class	IP20
Note on protection class	Only in mated condition with strain relief housing (These compact connectors are not designed for use in open, easily accessible areas.)
Potential marking	L N

Plug connection

Contact type (pluggable connector)	Male connector/plug
Connector connection type	for PCBs
Mismating protection	Yes

Mating direction to the PCB	90 °
Locking of plug-in connection	locking lever
Locking lever	yes

PCB contact

PCB contact	THT
Solder pin arrangement	2 in-line solder pins/pole
Number of solder pins per potential	2

Material Data

Color	black
Insulating material	Polyamide 66 (PA 66)
Flammability class per UL94	V0
Clamping spring material	Chrome nickel spring steel (CrNi)
Contact material	Copper or copper alloy, surface-treated
Fire load	0.146 MJ
Weight	6.702 g

Environmental Requirements

Surrounding air (operating) temperature	-35 … 85 °C
Processing temperature	-5 … +40 °C
Continuous operating temperature	-35 … +85 °C
Note on Continuous Service Temperature	Insulating parts for temperatures ≤ 105 °C

Commercial data

Country of origin	DE
GTIN	4044918511445
Customs Tariff No.	85366990990

Approvals / Certificates

Country specific Approvals

Logo	Approval	Additional Approval Text	Certificate name
	CCA DEKRA Certification B.V.	IEC 61535	NL-32105
	CCA DEKRA Certification B.V.	EN 61535	2173495.02

Ship Approvals

Logo	Approval	Additional Approval Text	Certificate name
	ABS American Bureau of Shipping	-	14-HG1241528-PDA
	DNV GL Det Norske Veritas, Germanischer Lloyd	-	TAE00001Z6
	DNV GL Det Norske Veritas, Germanischer Lloyd	-	TAE00001Z6
	LR Lloyds Register	IEC 61984	02/20050 (E6)

UL-Approvals

Logo	Approval	Additional Approval Text	Certificate name
	cURus Underwriters Laboratories Inc.	UL 1977	E45171 Sec. 9

Compatible products

Coding

	Item no.: 770-401 Coding pin; for plugs; Plastic	770-401

protection

	Item no.: 770-360 Lockout cap; for plugs; 5-pole; separable	770-360

Downloads

CAD/CAE - Smart Data

CAD data

3D Download 770-813	URL	Download

Subject to changes.